CHANNELINE

Trenchless Rehabilitation of Non-Circular Wastewater Conveyance Pipe and Tunnels using Advanced Glassfibre Reinforced Polymer Mortar Panels

February 18th, 2016
Pipe User's Group
24th Annual Sharing Technology Seminar

Americore INTERNATIONAL

Timothy Webb, Channeline Vice President - UAE
Ladan Sahafi, Channeline Representative – Western US

NORTHERN CALIFORNIA PIPE USERS GROUP

CHANNELINE

Agenda

- City of Los Angeles Approach
- Rehab Methods for Non-circular Pipes
- GRP FRPM Fiberglass Pipe Approval
- Pipe Manufacturing
- Recent Projects in Los Angeles
- Lessons Learned
- Questions & Answers

CHANNELINE

City of Sewers

1. 6,60 all sizes)
    1. ation in 1989
    2. wal Program
    ar
2. 64 M NC
    1. l Sewer
    2. tor Sewer
    3. e longest run

City of Los Angeles NC Sewers

1. Started NC sewer rehabs in 2000's
   A. 105" Lower North Outfall Sewer
   B. 39" La Cienega Interceptor Sewer
   C. North Outfall Sewer is the longest run

2. First Tested NC GRP in 2003
   A. Woodvale Ave. Storm Drain
   B. 450 LF of 39" Semi-elliptical

CHANNELINE

Los Angeles
Fun, Fun, Fun!

City of Los Angeles NC Sewers

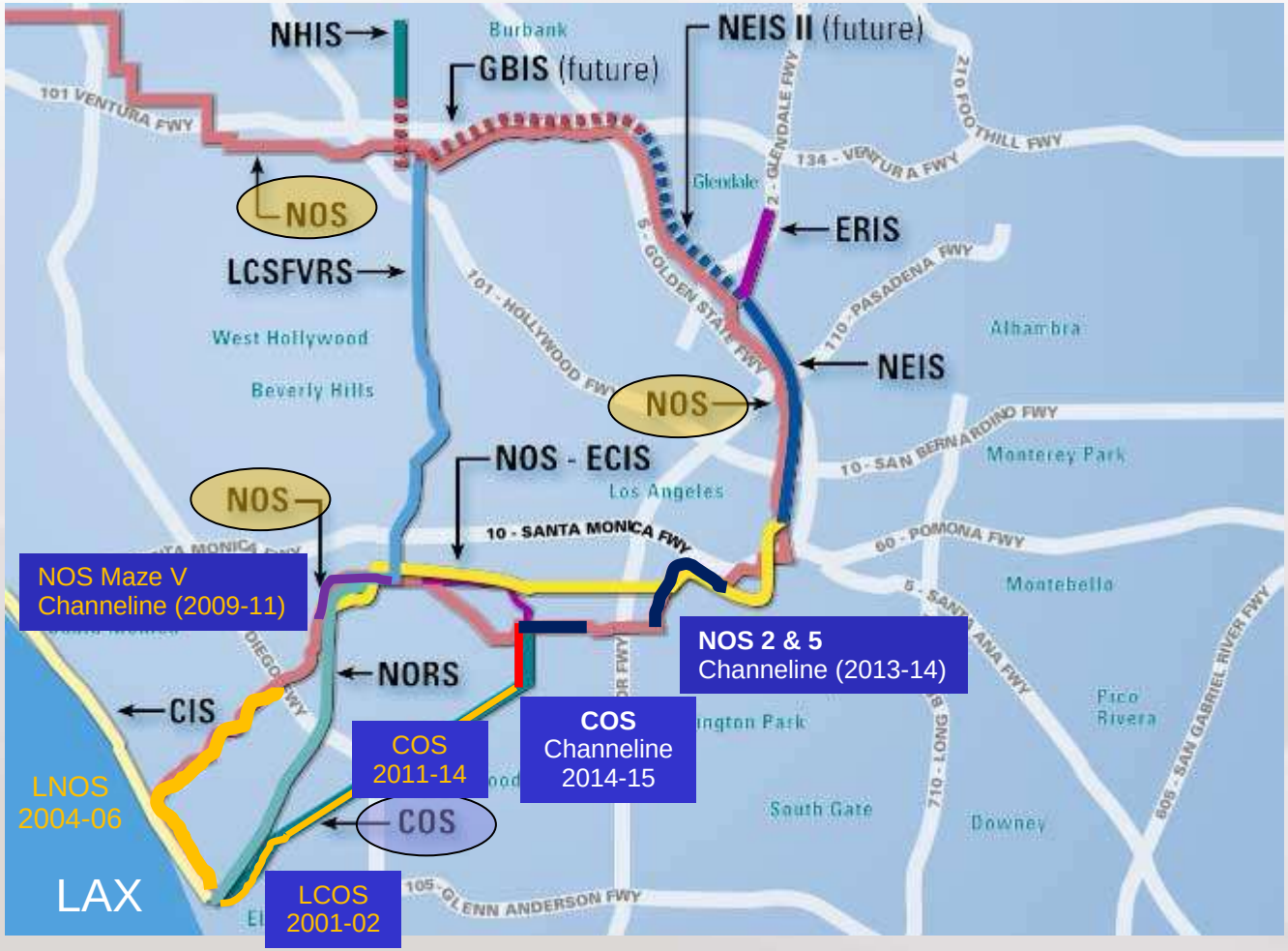

LA Rehab Methods for NC Pipes

1. Man-entry with full By Pass Option
   A. Formed/Cast in Place PVC Liner
      a) Arrow-Lock (modified T-Lock)
      b) Danby (Grooved and Locked PVC)
   B. Machine Spiral Wound PVC Liner
      a) SPR (non-structural, requires rebar)

2. None Man-entry Live Flow Sliplining GRP

LA Rehab Methods for NC Pipes

- Formed/Cast in Place PVC Liner
- Full Bypass Required
- Full Surface Cleaning
- Rebar or Reinforced Mesh Placed
- Forms and LINER are Placed
- 4,000 psi Grout is Pumped Behind Liner
- Move Forms Forward and Repeat

- Labor Intensive
- Invert Remained Unlined
- Slow Process (50 ft/day)

Lower North Outfall Sewer (LNOS)
105" Horse Shoe Shape
J.R. Pipeline
PUG PAPER 2012

LA Rehab Methods for NC Pipes

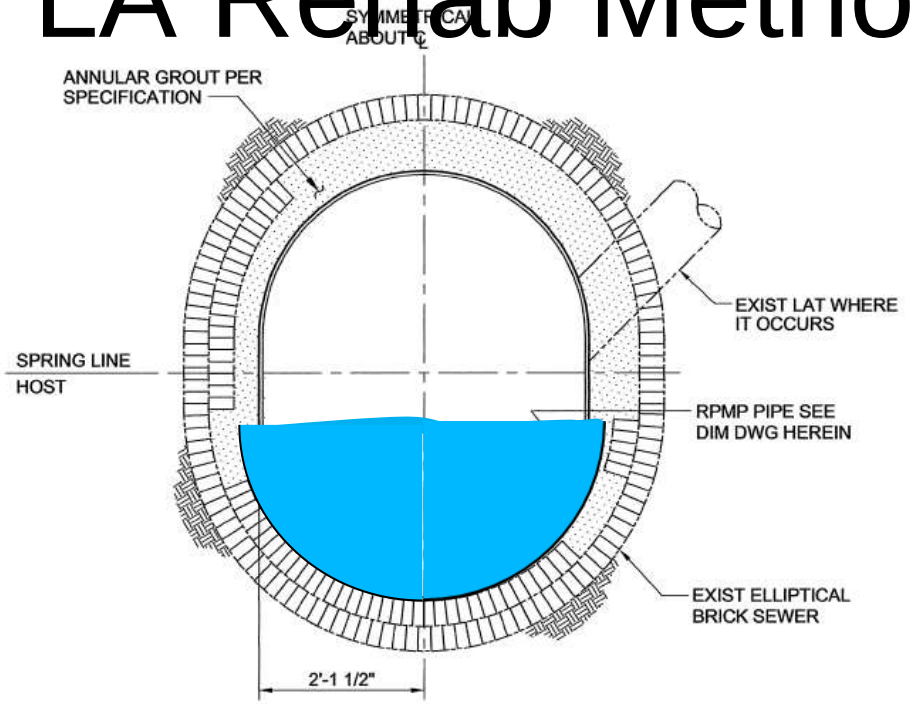

57 x 72 HOST

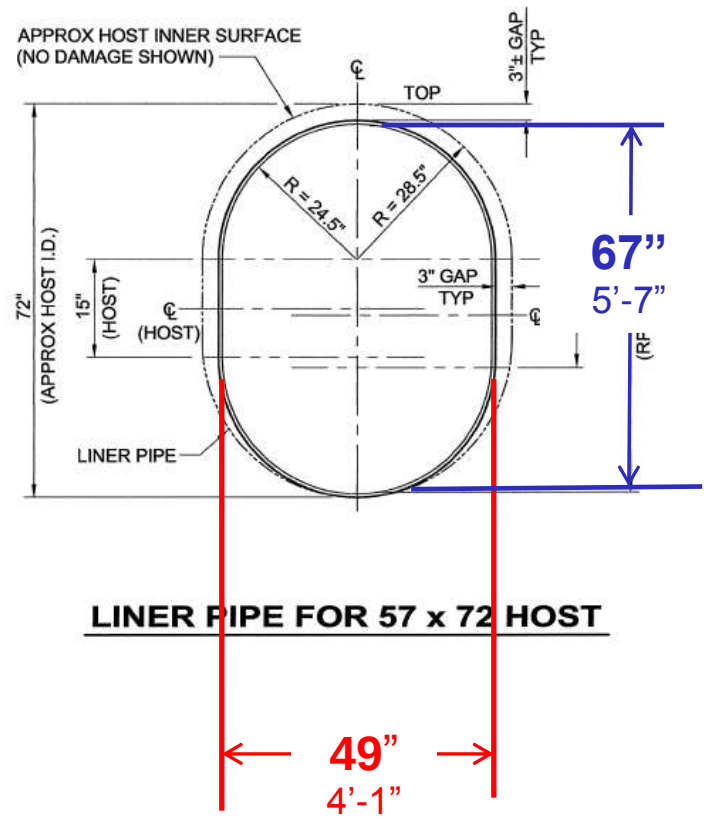

LINER PIPE FOR 57 x 72 HOST

None Man-entry Live Flow Sliplining GRP

G 8 | OPTION 1 - SLIPLINED REINFORCED POLYMER MORTAR PIPE LINER

BUREAU OF ENGINEERING

CITY OF LOS ANGELES NC GRP PROJECT HISTORY

Previously …

1. NOS Emergency at LA River – Vido Artukovich and Sons (2008)
2. 23rd Street at Trinity Emergency (Ameron RPMP) – Tomovich (2009)
3. NOS Maze V Rehab – Spiniello (2010-11)

Currently in Final Stages …

1. NOS Units 2 and 5 (under construction) – Spiniello
2. West LA Interceptor Sewer (under construction) – Colich
3. COS Rehab from Slauson to Vernon (under construction) – Buntich

Future Construction …

1. NOS Unit 3 (Bid in July 2015) – (6600 ft Test Project)
2. NOS 18 (to bid)
3. NOS 6 and NOS 7 (to bid)

CHANNELINE GRP APPROVAL

London Sewer System
1600's Built

HISTORY:

- Started in 1978
- In London
- Specialized in Corrosion
- Specialized in Structural Rehab

• 1979 London's major water agency retained Water Research Centre (WRc) for investigation of structural and corrosion problems in large diameter sewers (300 year old brick-lined sewer pipelines)

- (WRc) undertook 5 year research
- Study materials and methods of rehab (HDPE, PVC, Spray-up Mortar, GRP, …)

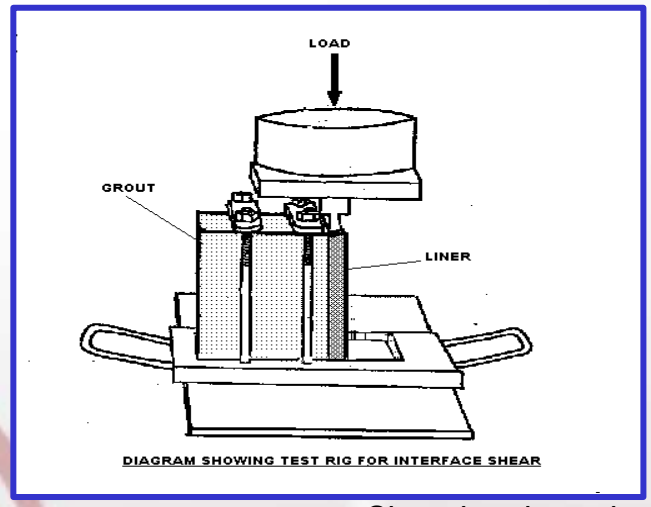

Shear bond test rig

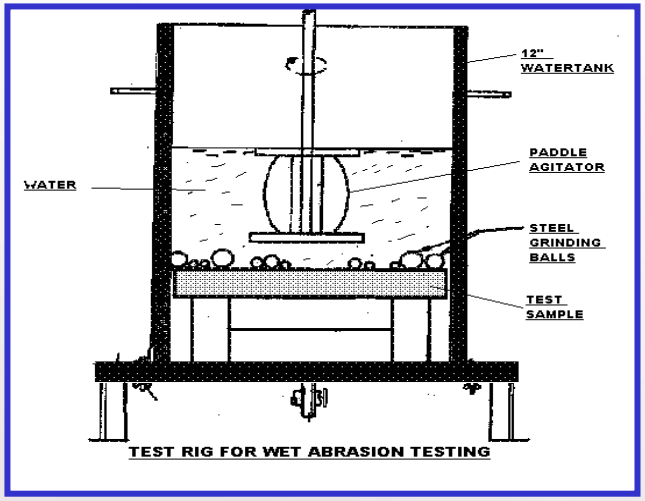

Wet abrasion test rig

Water Research Centre Work Included:

- Finite element studies and computer modelling
- Mechanical testing
- Wet abrasion testing
- **Flow/Hydraulic monitoring**
- Corrosion resistance evaluation
- Strain corrosion testing

CHANNELINE

After 5 years research and a £10 million budget

- **1984** WRc Sewerage Rehabilitation Design Manual was finally published

WRc
Sewerage Rehabilitation Design Manual

- **1984** Channeline became a Manufacturing Company to specifically produce and market STRUCTURAL MAN-ENTRY GRP lining systems under : **Channeline Sewer Systems Ltd.**

- **Since then,** many innovations in production of GRP panels were made and several patents were issued to Channeline

CHANNELINE

CHANNELINE MANUFACTURING

MANUFACTURING - Standards:

- Channeline GRP meets and exceeds
  - **WRc** Guidance WIS 4-32-02 for Materials
  - **British Standard BS5480**
  - **ASTM D3262**, Type 1, Liner 2 and Grade 3 Cell Class

DESIGN - Standards:

- Round Pipe Standards DO NOT DIRECTLY Correlate to ODD shapes.
  - **AWWA M45:** Manual for Fiberglass Pipe Design (Chapter 5)
  - **WRc:** Guidance WIS 4-32-02 for Materials
  - **FEA:** Finite Element Analysis Check

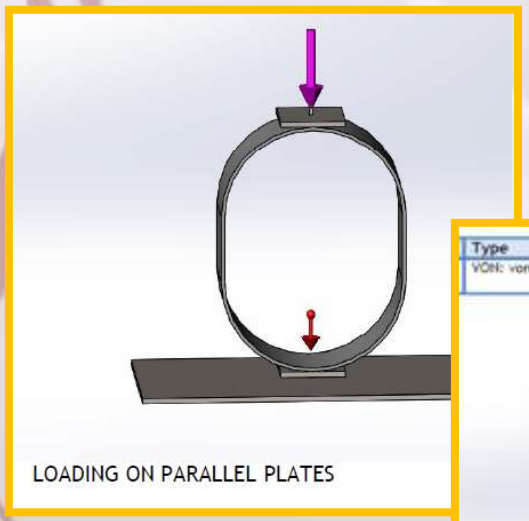

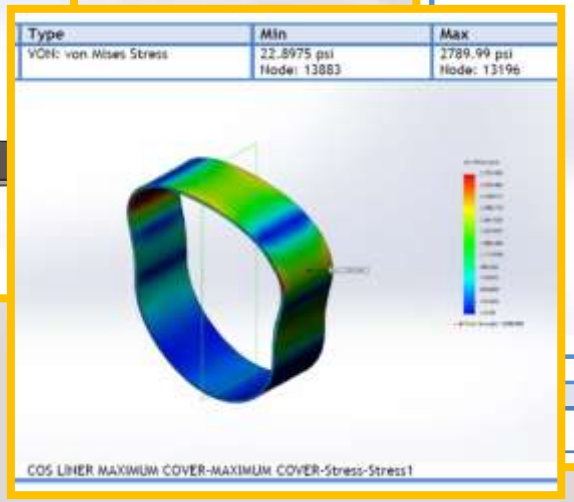

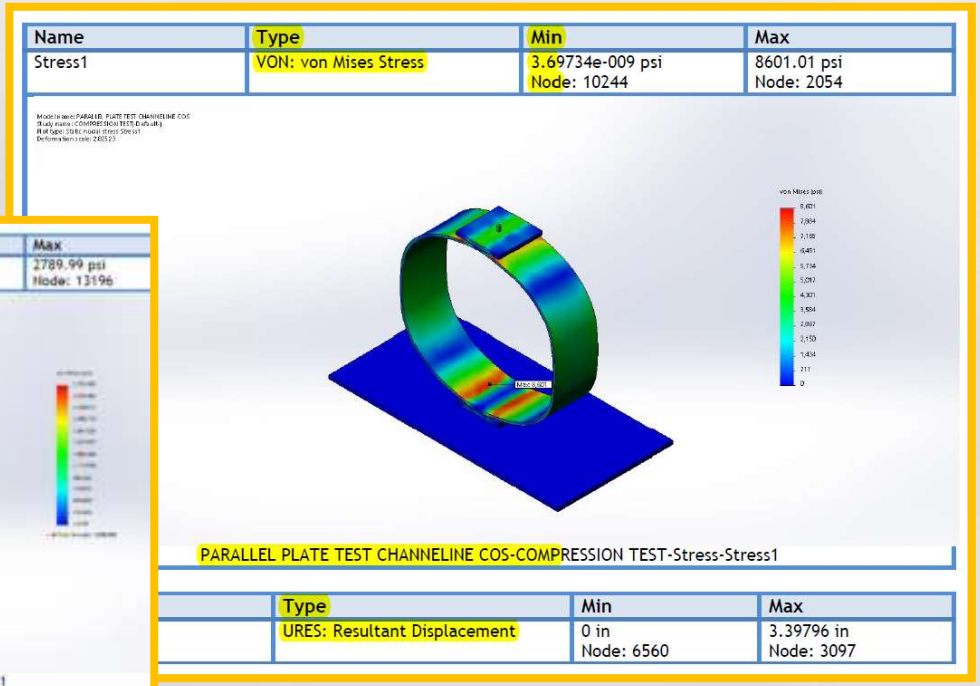

ASTM D-2412 Parallel Plate Test for Plastics

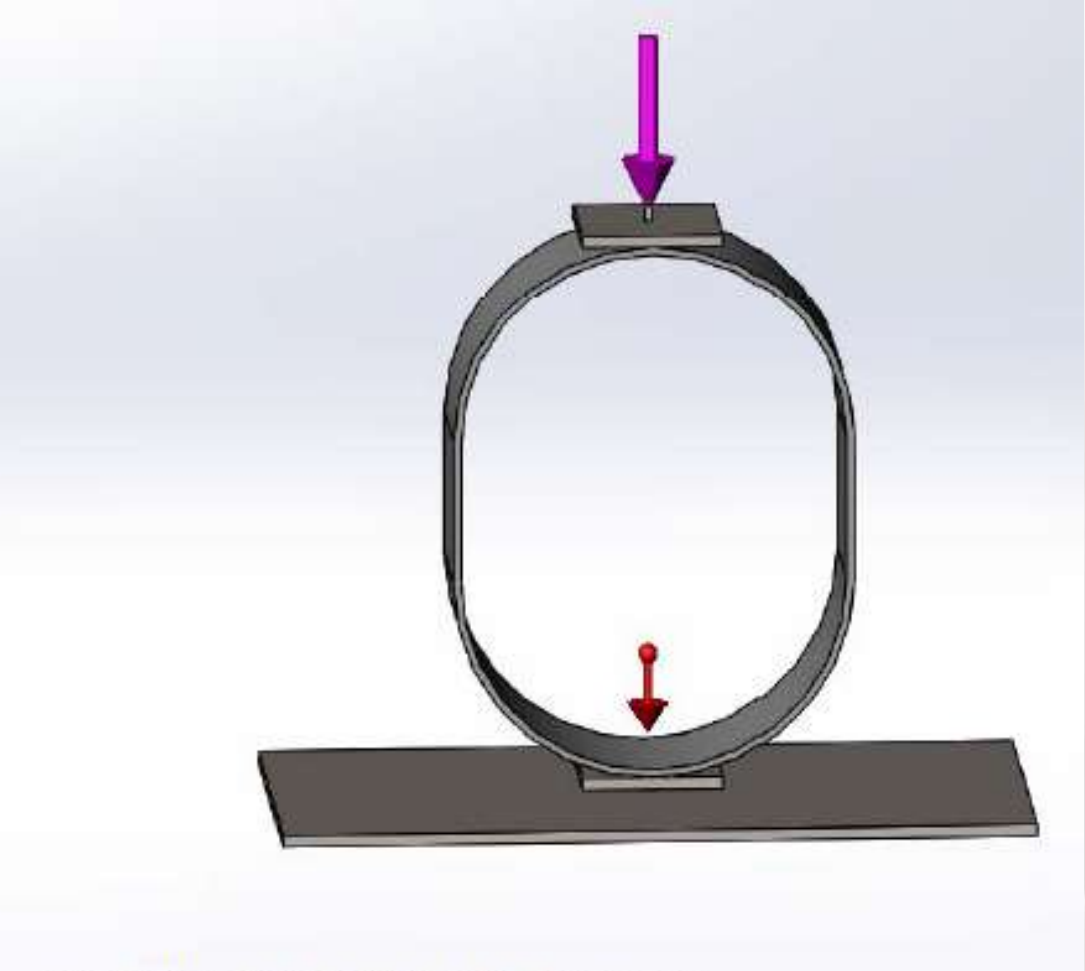

LOADING ON PARALLEL PLATES

FEA for Maximum Cover Depth

Type	Min	Max
VON: von Mises Stress	22.8975 psi Node: 13883	2789.99 psi Node: 13196

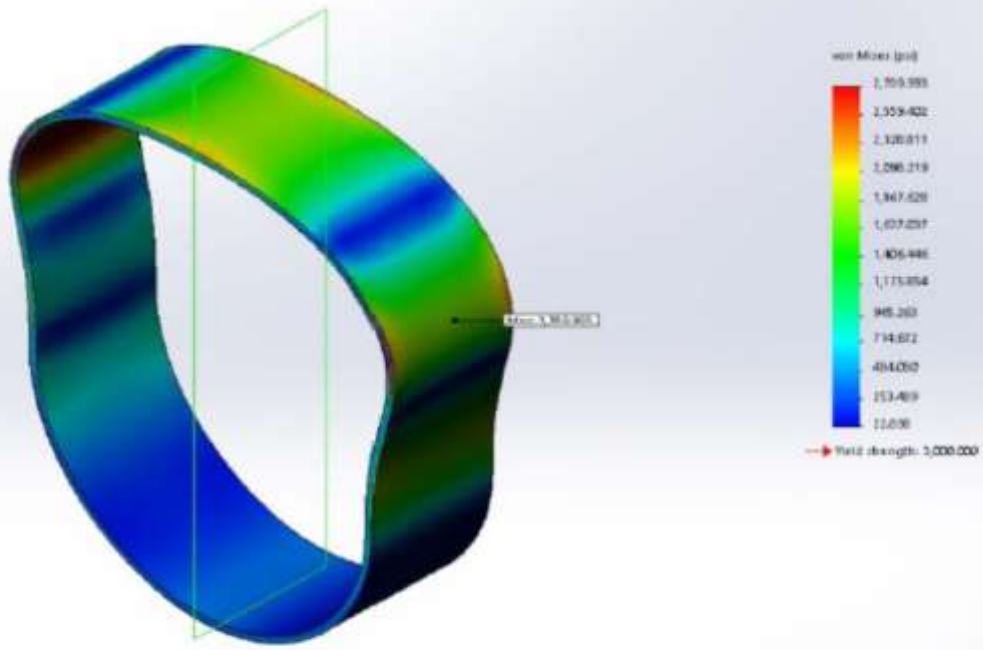

COS LINER MAXIMUM COVER-MAXIMUM COVER-Stress-Stress1

Earthload and Water Table Combined

Name	Type	Min	ax
Stress1	VON: von Mises Stress	3.69734e Nod	1.01 psi e: 2054

Good News
This won't be on
the test today!

ALLEL PLATE TEST CHANNELINE COS-COMPRESSION TEST-Stress-Stress1

Name	Type	Min	Max
Displacement1	URES: Resultant Displacement	0 in Node: 6560	3.39796 in Node: 3097

MANUFACTURING - Make-up of Liner:

60 mil (1.5 mm) Inner Corrosion Barrier
- Isophalthalic Polyester
- Vinyle Ester
- Epoxy

Inner Fiberglass Consolidated bi-direction Fibreglass Mat and Resin

Center Core Silica Sand, Resin and Chopped Fiberglass

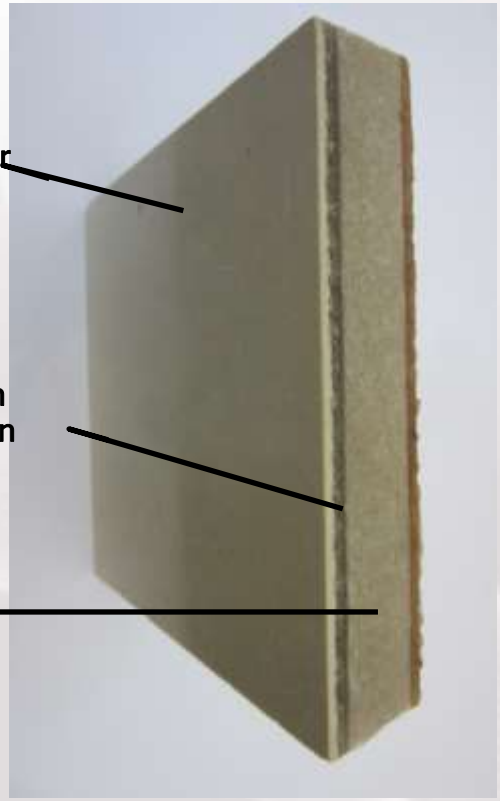

Outer Fiberglass Mat and Resin complimented with Chopped Glass (chopped fiberglass for sliplining flush-bell joint where gasket groove and coupling shelf will be machined out"

Bonded Corse Aggregate OD Enhances Adhesion with Grout as Required by WRc Type 1 composite design method

CHANNELINE

MANUFACTURING – Joint Systems:

Pipe	One-piece	Gasket BellxSpigot
Panel	Multi-piece	Tapered Tongue & Groove Longitudinal Joint
Invert Liner	Clam-shell	75 mm Deep Radial T&R

MANUFACTURING – Gasketed Joints:

- Gaskets are Silicone Filled roll-over type
- Gaskets fit into the Bell and Spigots Joint
- Rubber Gasket Specifications
  - EPDM synthetic rubber compound
  - ASTM C361, C443, C425, C1619 and CSAA257
- Rated for high concentration of sewer gases and chemicals present in municipal sanitary sewer systems
- SPWCC Greenbook Approved (ASTM C425)
- Pressure Tested to 100 PSI

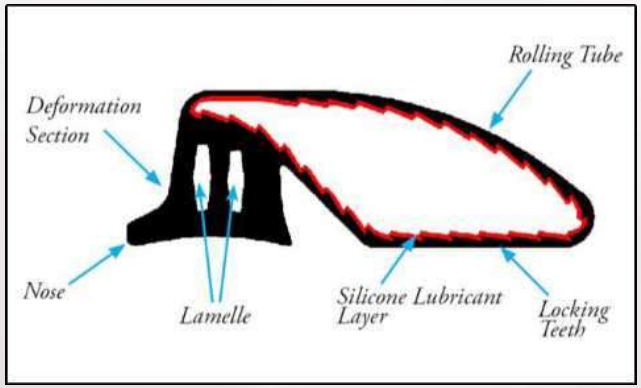

CHANNELINE

MANUFACTURING – Quality Control:

- All Channeline renovation systems conform to the requirements of the WRc rehabilitation design manual and the relevant BS, ISO & ASTM standards.
- Quality control is in accordance with ISO 9000.
- Random samples are taken twice daily and checked for mechanical properties.
- Every manufactured liner is issued with its own identity number giving full trace-ability.
- Impact Test - All liners are checked for Barcol hardness to ensure full resin cure.
- Flexural Modulus and Bending Stress test values issued for each contact if requested.

MANUFACTURING – Traceability

MANUFACTURING – Custom Made

- Gather data for the Host Pipe (VERY CRITICAL)
  - CCTV and Sonar
  - 3D Laser Profiling
- Prepare the Pipe Profile Drawings

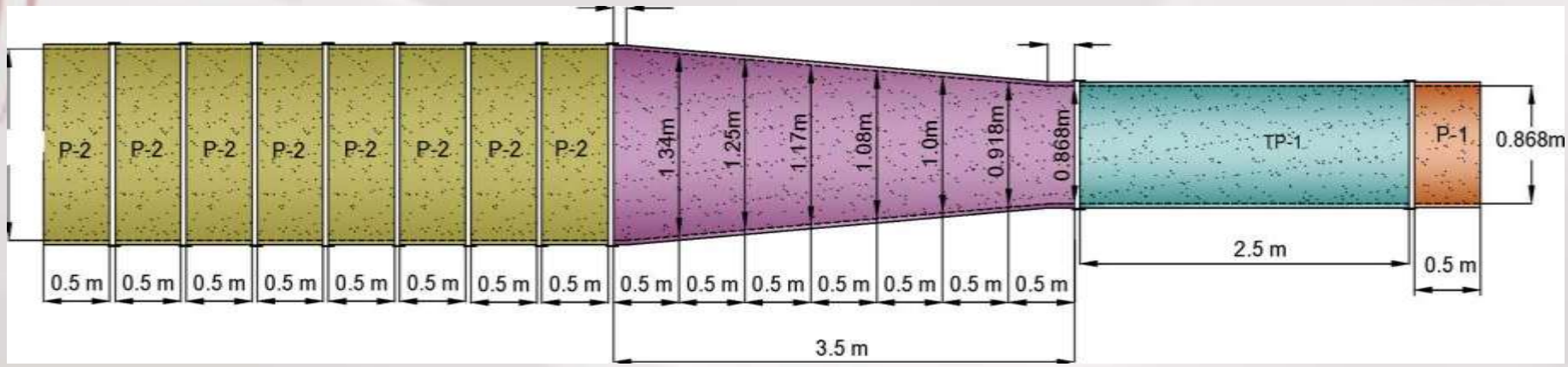

CHANNELINE

Measure Twice – Cut Once!

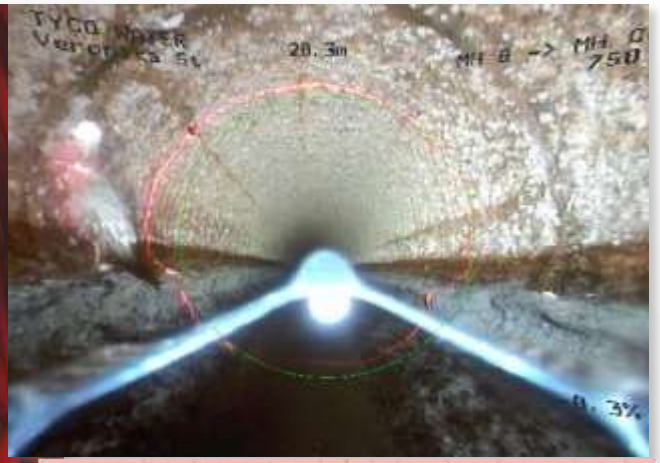

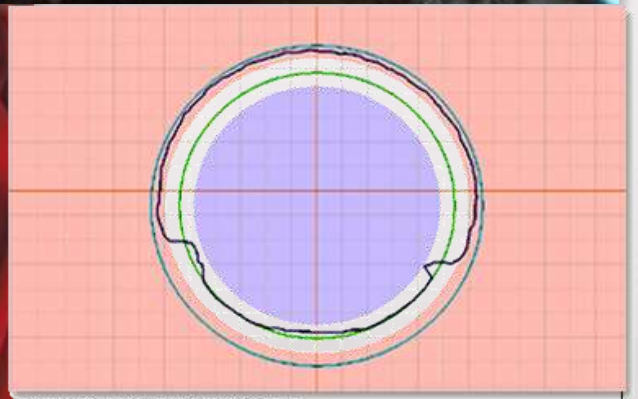

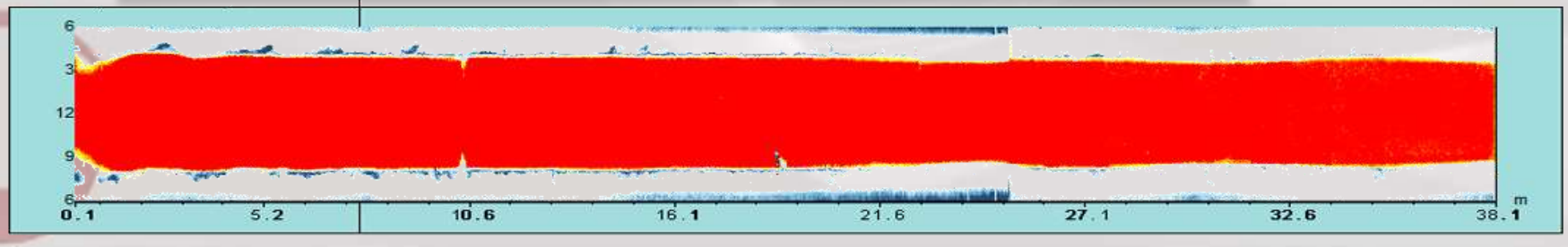

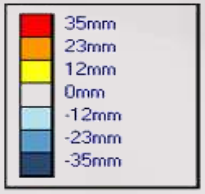

MANUFACTURING – Custom Made

- Submittals
- Making of the Mold

MANUFACTURING - Inspection

CHANNELINE

MANUFACTURING – Inspection

TÜV SÜD ISO 9001

GRP PIPE FEATURES

- Custom -Made Production in any Size and Shape
- Fully Structural Rehabilitation Solution
- Maximizing Hydraulic Capacity
- Excellent Corrosion Resistance
- Excellent Impact and Abrasion Resistance
- Expected Service Life of Over 50 Years

GRP PIPE - Applications

- Sewer Main Pipelines
- Sewer Overflow Pipelines
- Sewer Interceptor Pipelines
- Sewer Inverts
- Storm Water Drains
- Seawater Cooling Pipelines
- Large Diameter Culverts and Tunnels

GRP PIPE – Shapes and Sizes

- Ovoid
- Egg shaped
- Elliptical
- Flattened Elliptical
- Arch barrel
- Box shaped

DIMENSIONS	LENGTH IN METERS	NO. OF PANELS PRODUCED	NO. OF MOULDS MADE	PROFILE	CONTRACTOR / LOCATION / YEAR
1640mm x 1.0m / Wall 30mm	11	11	1	CIRCULAR (ONE PIECE)	JETROD PIPELINE CONSULTANT & ENGINEERING LTD. HONGKONG (2013)

GRP PIPE - Performance

Hydraulic Capacity:

- Maximizes Cross Sectional Area of the Liner compared to Host Pipe
- Relative Surface Roughness Smooth
- Low Manning's Coefficient of 0.009
- GRP sheds slime easily

PRODUCTS – Performance

Flow Capacity Generally Improves After Lining with GRP

PRODUCTS – Performance

SIMPLIFIED FOR ROUND PIPE

Flow Capacity $Q = (1.49/n)\ A\ R^{2/3}\ S^{1/2}$

n = Manning's Coeff.
A = Cross Sectional Area
R = Wet Radius
S = Slope

Reducing Two Simultaneous Equations On The Same Slope

$$Q_1 / Q_2 = (n_2/n_1)^{-1} (D_1/D_2)^{8/3}$$

n_1 = Manning's Coeff. Host
n_2 = Manning's Coeff. Channeline
D_1 = Equivalent Mean Circular Diameter of Host
D_2 = Equivalent Mean Circular Diameter of Channeline

THERE IS GOING TO BE A TEST ON THIS AT THE END OF THE PRESENTATION!!

Channeline CL

Made to Measure Molded Curved Panels

CHANNELINE

Box Culvert

Box Culvert – Completed Liner






Flat Bottom Non-Circular

Egg Shaped

CHANNELINE

Curved Box

CHANNELINE

Flat Bottom and Transition Pieces

CHANNELINE

Transition & Reducer Piece

CHANNELINE

Transition & Reducer Piece

CHANNELINE

RECENT PROJECTS IN LOS ANGELES

CHANNELINE

North Outfall Sewer (NOS) Unit 2 and Unit 5 Rehab
LARGEST GRP SLIPLINE PROJECT TO DATE

Location:	**Los Angeles, California**
Contractor:	**Spinielllo**
Project Size:	**$15,694,000**
Pipe Size:	**72” and 66”**
Length:	**10,500 LF**
Liner Type:	**Single Piece Liner Pipe**
Joint Type:	**Positive Gasket Seal Low**
Profile	**Bell x Spigot**
Installation:	**Jacked Sliplining Under Live-Flow** **Man-entry under low flow (curves) planned**
Year:	**2013 – 2015 (under construction)**
Current:	**100% manufactured and shipped**

CHANNELINE

North Outfall Sewer (NOS) Unit 2 and Unit 5 Rehab

$15,694,000

Unit 2: 5,351 LF 72” SE Slipline
Unit 2: 800 L F72” SE Man-entry
Unit 5: 3,980 LF 66” SE Slipline
Unit 5: 213 LF of 66” SE Man-entry
Unit 5: 195 LF of 66” SE Man-entry

Multiple Curved alignments

CHANNELINE

North Outfall Sewer (NOS) Unit 2 and Unit 5 Rehab

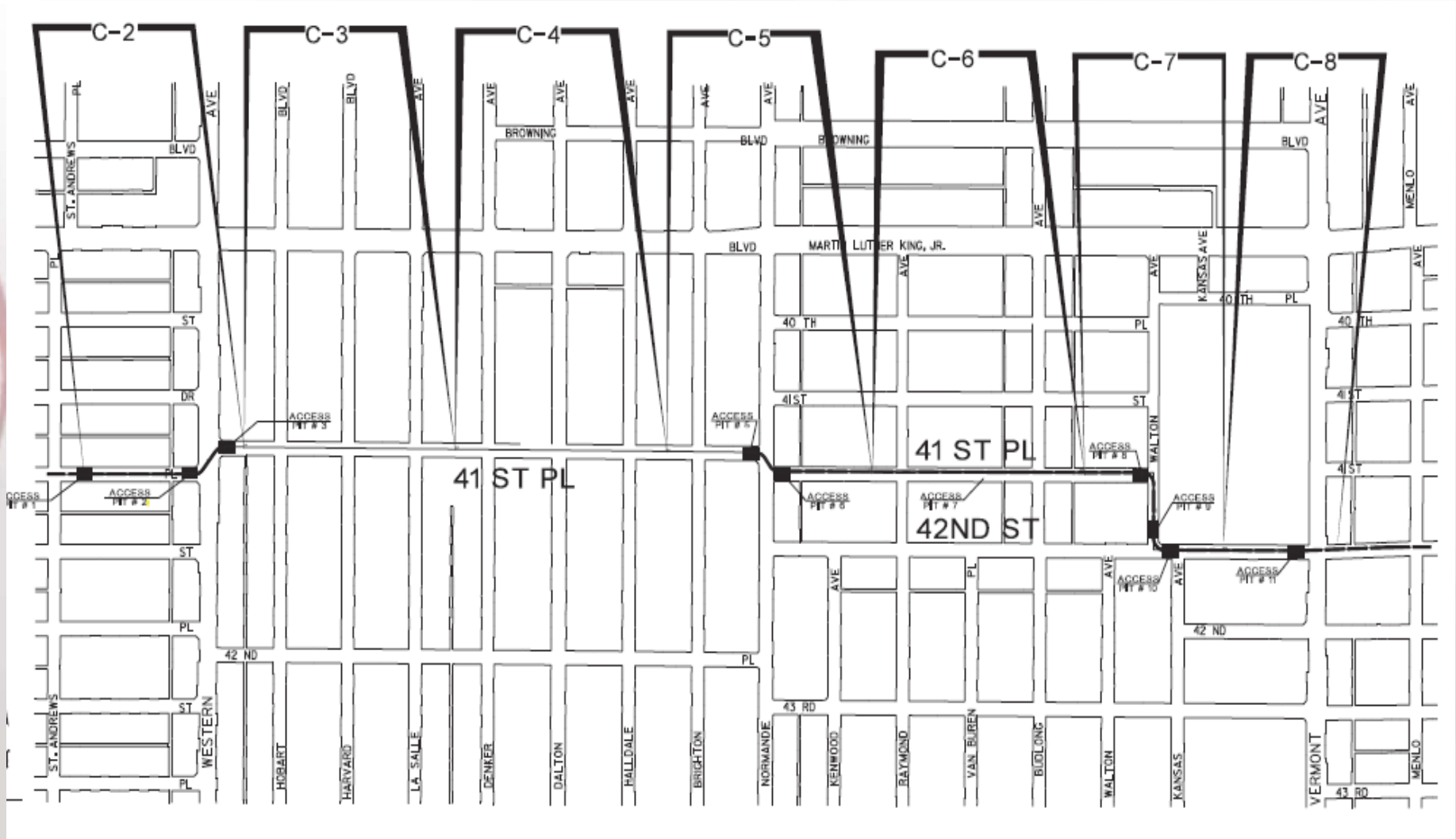

North Outfall Sewer (NOS) Unit 2 and Unit 5 Rehab

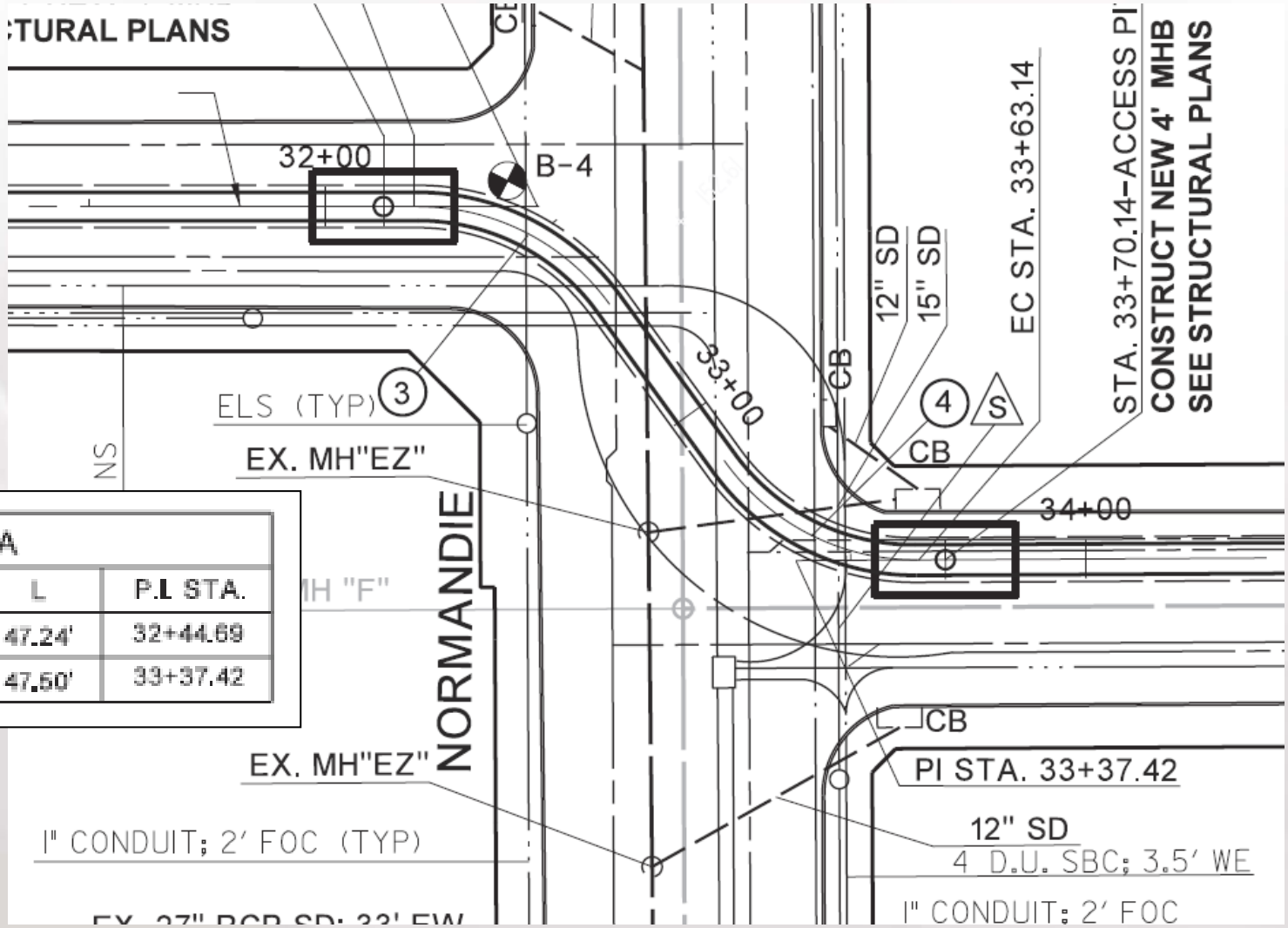

CURVE DATA					
No.	Δ	R	T	L	P.I. STA.
3	54°07' 30"	50'	25.55'	47.24'	32+44.69
4	45°26' 15"	50'	25.72'	47.50'	33+37.42

CHANNELINE

North Outfall Sewer (NOS) Unit 2 and Unit 5 Rehab

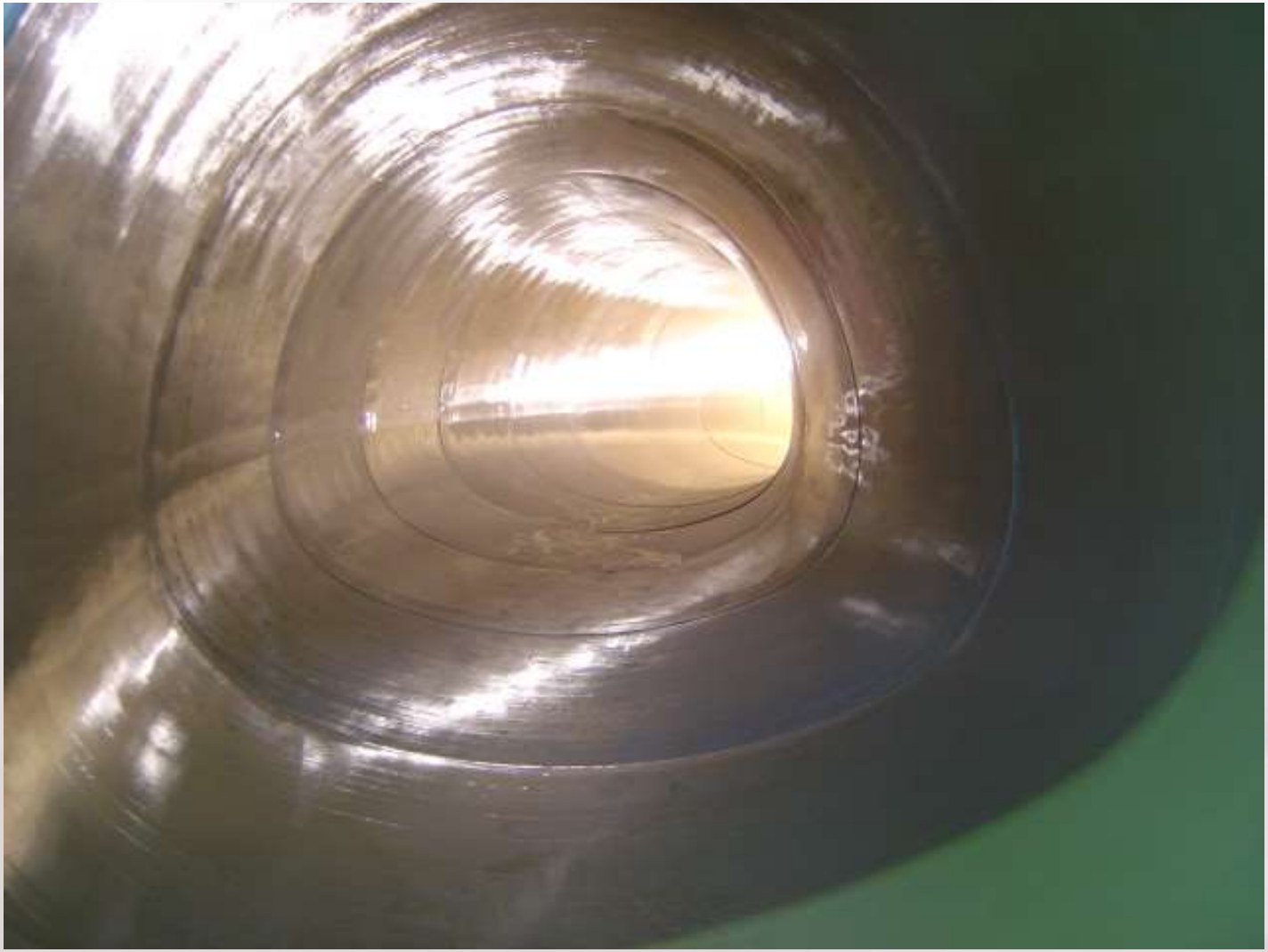

North Outfall Sewer (NOS) Unit 2 and Unit 5 Rehab

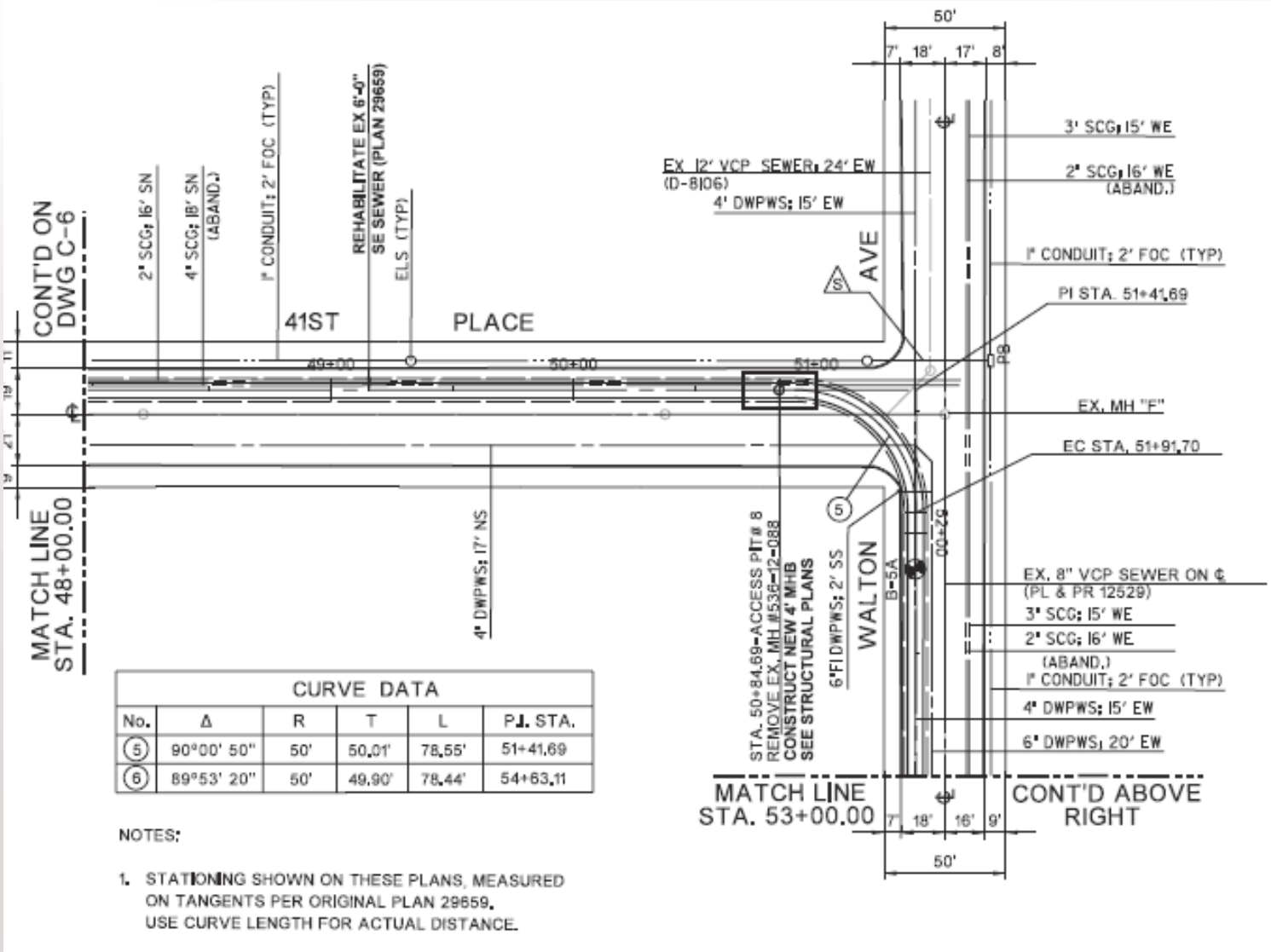

CURVE DATA

No.	Δ	R	T	L	P.I. STA.
5	90°00' 50"	50'	50.01'	78.55'	51+41.69
6	89°53' 20"	50'	49.90'	78.44'	54+63.11

NOTES:

1. STATIONING SHOWN ON THESE PLANS, MEASURED ON TANGENTS PER ORIGINAL PLAN 29659. USE CURVE LENGTH FOR ACTUAL DISTANCE.

CHANNELINE

North Outfall Sewer (NOS) Unit 2 and Unit 5 Rehab

CHANNELINE

North Outfall Sewer (NOS) Unit 2 and Unit 5 Rehab

CHANNELINE

North Outfall Sewer (NOS) Unit 2 and Unit 5 Rehab

CHANNELINE

North Outfall Sewer (NOS) Unit 2 and Unit 5 Rehab

CHANNELINE

North Outfall Sewer (NOS) Unit 2 and Unit 5 Rehab

Lessons Learned:

- Damage during Unloading (dropped a container)
- Proper Gasket Installation (bonded to spigot)
- Bulkhead Integrity (Hidden side sewers)
- Lateral Connections

CHANNELINE

REHABILITATION OF CENTRAL OUTFALL SEWER (COS) – SLAUSON TO VERNON

Location:	**Los Angeles, California**
Contractor:	**Buntich**
Project Size:	**$6,844,442**
Pipe Size:	**72”**
Length:	**5,246 LF**
Liner Type:	**Single Piece Liner Pipe**
Joint Type:	**Positive Gasket Seal Low**
Profile	**Bell x Spigot**
Installation:	**Jacked Sliplining Under Live-Flow**
Year:	**2015 (under construction)**
Current:	**100% manufactured and shipped**

CHANNELINE

REHABILITATION OF COS

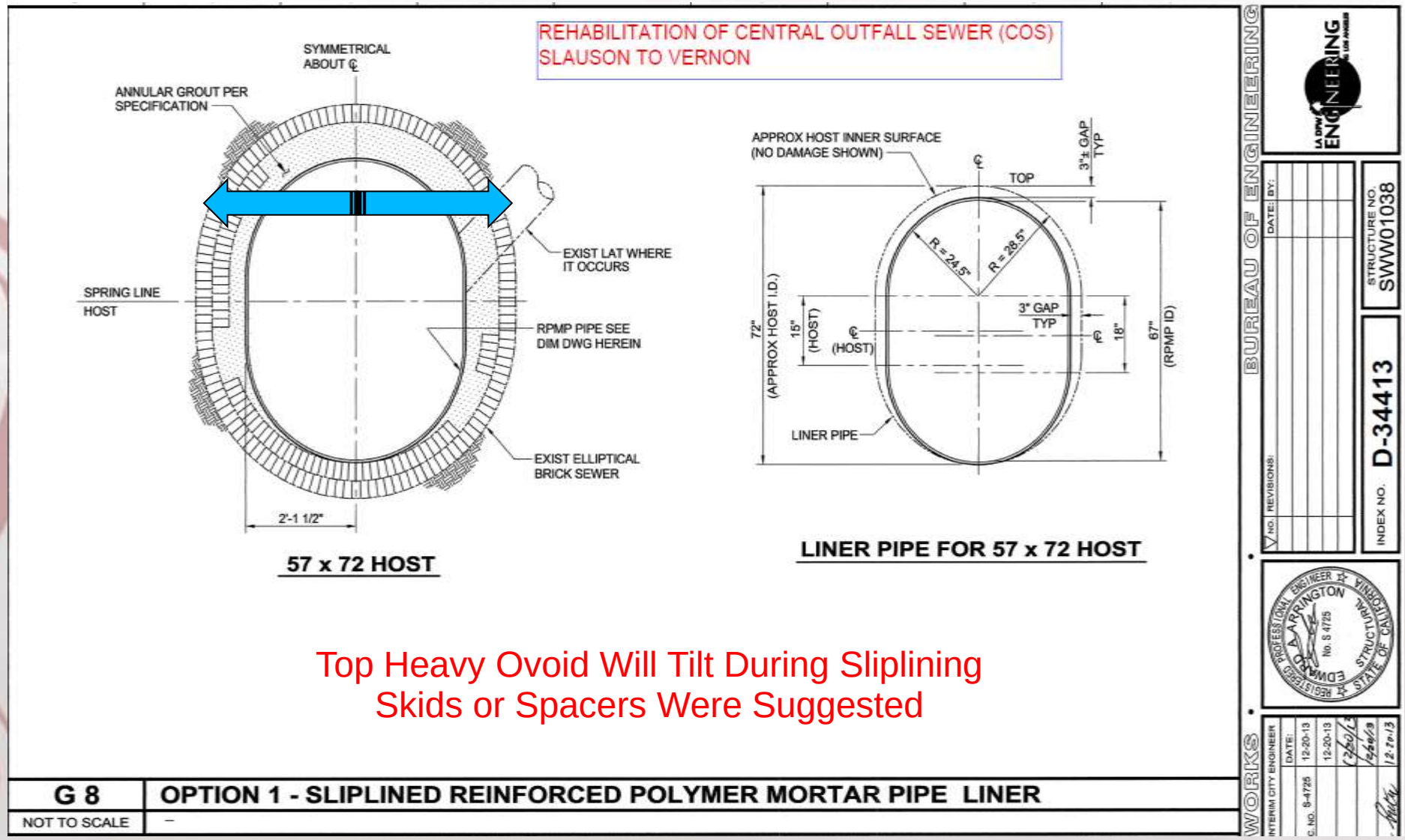

Top Heavy Ovoid Will Tilt During Sliplining
Skids or Spacers Were Suggested

Channeline - SL

Skids (aka centralizers)

1. Reduce Jacking Loads
2. Prevent Floatation During Annular Space Grouting
3. Prevent Top Heavy Shapes from Tilting

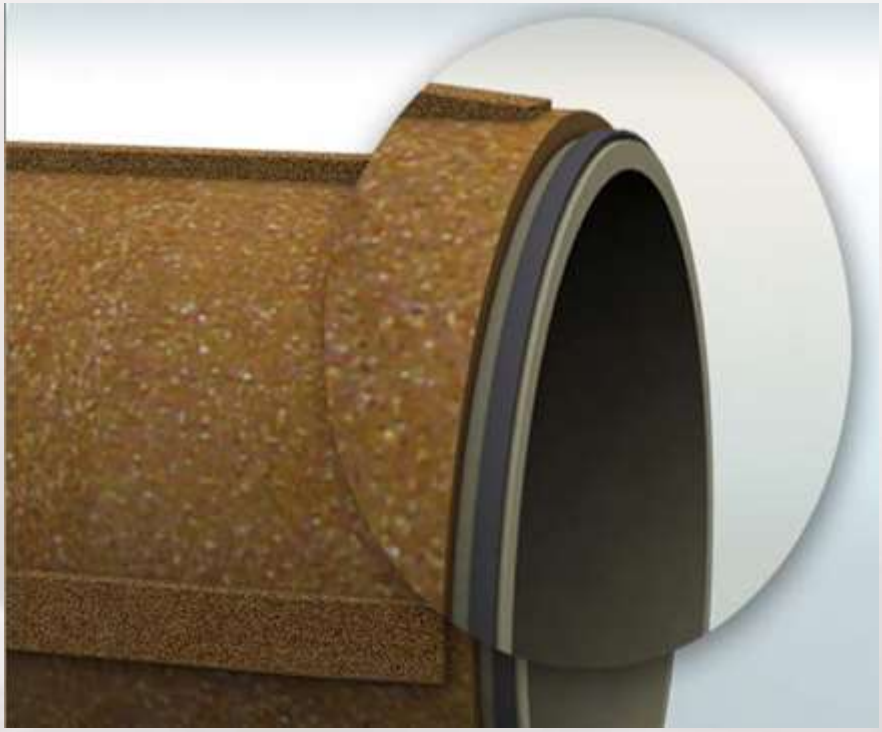

Channeline - SL

Skids (aka centralizers)

1. Factory Installed
2. Four per Pipe Section

What Happened to the Skids?

What Happened to the Skids?

STEEL MANDREL SHOWED CONTACT AT
2, 4, 8 and 10 O'clock
LOCATIONS DURING CLEANING AND MANDREL TESTING!!!

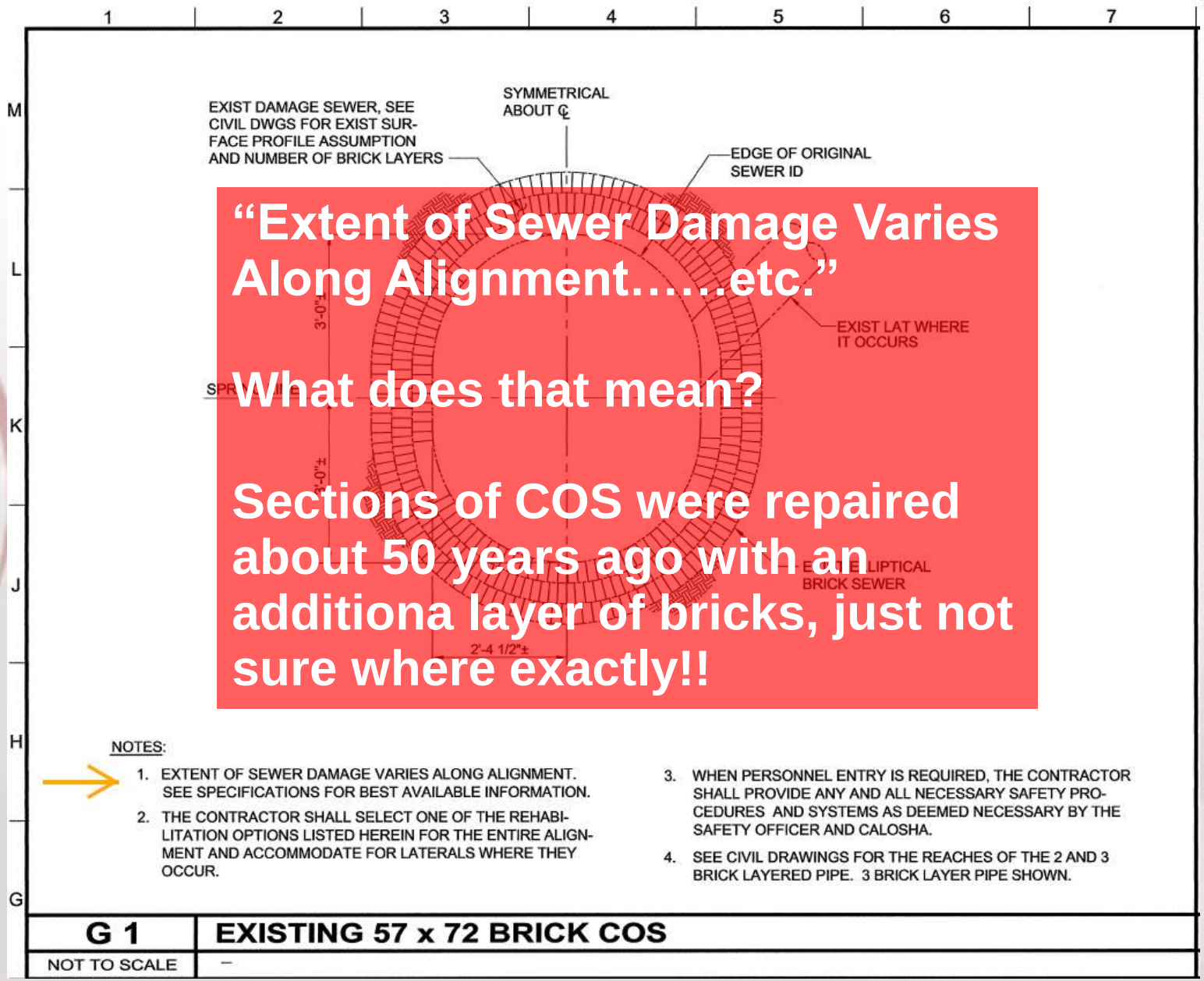

"Extent of Sewer Damage Varies Along Alignment……etc."

What does that mean?

Sections of COS were repaired about 50 years ago with an additiona layer of bricks, just not sure where exactly!!

REHABILITATION OF COS

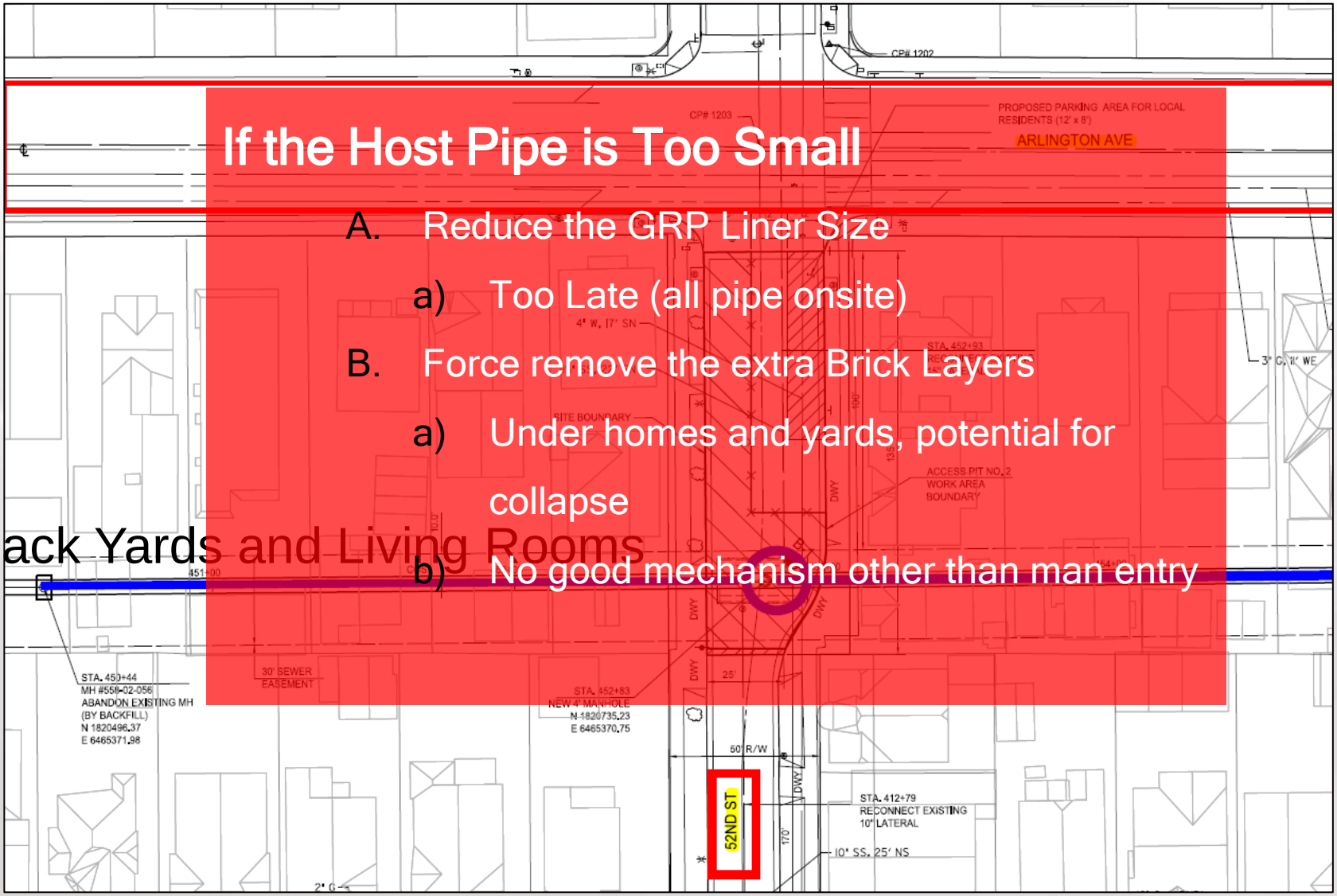

If the Host Pipe is Too Small

A. Reduce the GRP Liner Size

a) Too Late (all pipe onsite)

B. Force remove the extra Brick Layers

a) Under homes and yards, potential for collapse

b) No good mechanism other than man entry

Back Yards and Living Rooms

REHABILITATION OF COS (Jacked Sliplining WITH 100 TON FORCE)

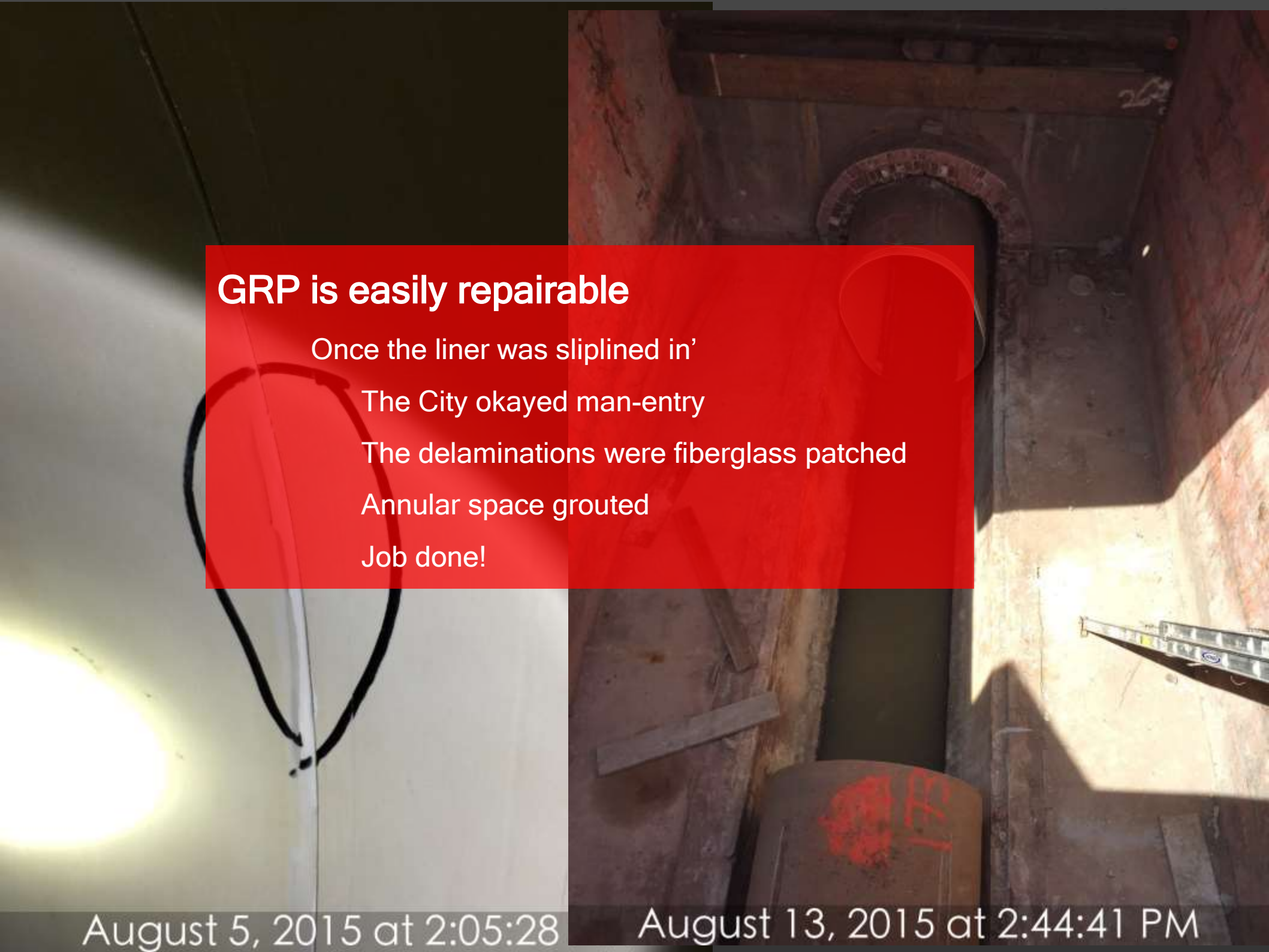

GRP is easily repairable

- Once the liner was sliplined in’
  - The City okayed man-entry
  - The delaminations were fiberglass patched
  - Annular space grouted
  - Job done!

CHANNELINE

REHABILITATION OF COS

Lessons Learned:
3D Laser Scan the System before bid

Lateral Connections Internal Access

Existing connections are normally brought into the liner as they are reached.

It is not necessary to block off the connections during lining.

Finishing RC Manhole

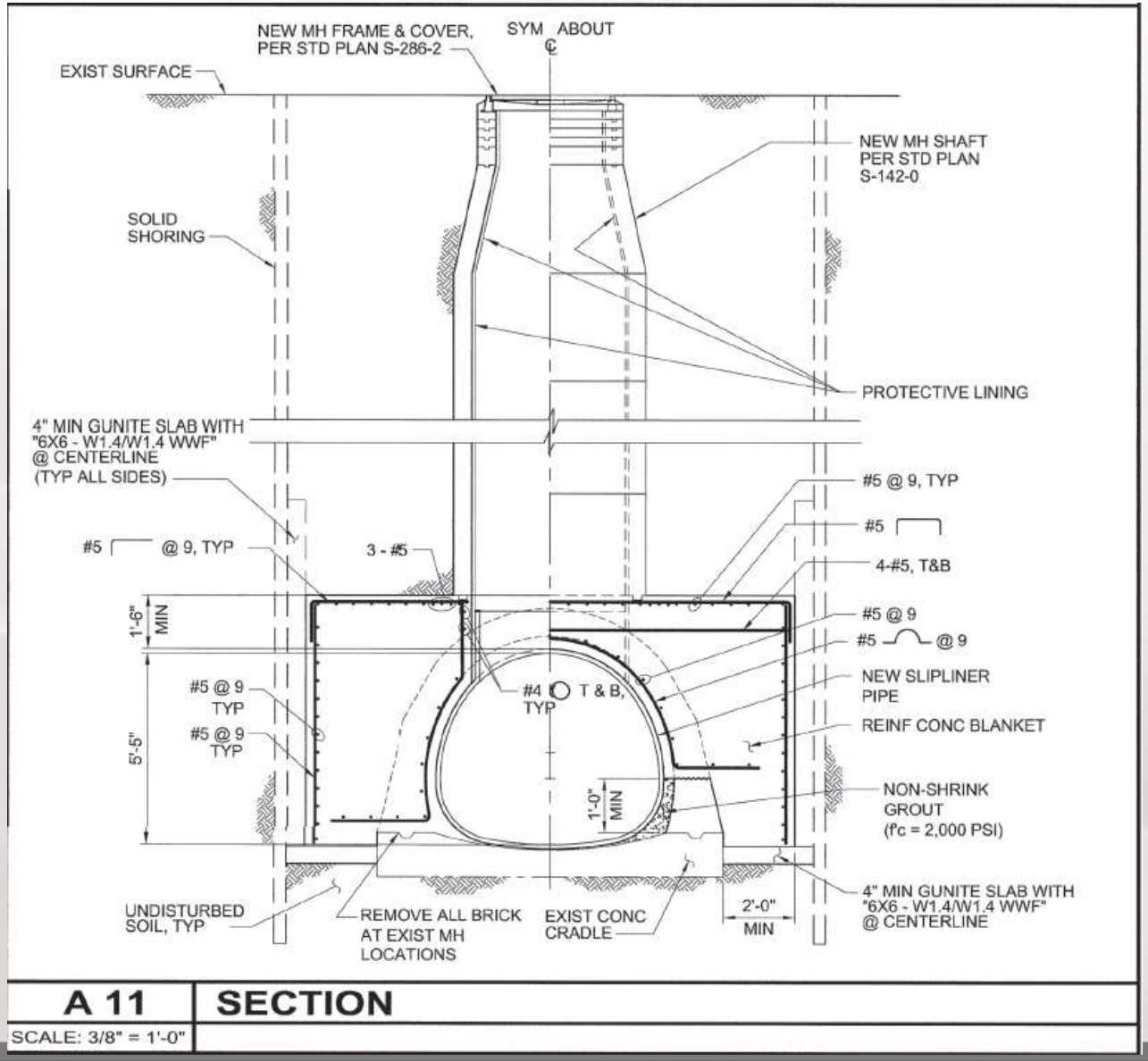

Finishing RC Manhole

Grouting Process

Casting Manhole Structure

Channeline is global product with over 30 years of installation history

- UK
- Ireland
- Belgium
- France
- Holland
- Luxembourg
- Sweden
- Switzerland
- Germany
- Poland
- Denmark
- Finland
- Czech Republic & Slovakia
- United Arab Emirates
- Russia
- Canada
- USA
- Argentina
- Uruguay
- Hong Kong
- Finland
- India
- Portugal
- Italy

CHANNELINE

FUTURE PROJECTS:

- Domestic:
  - San Francisco
  - City of Los Angeles
  - Greater Chicago Metropolitan Sewer District
- International:
  - Canada
  - Mexico and Columbia
  - Romania
  - Thailand
  - Hong Kong

Americore

INTERNATIONAL

www.americore.us.com

CHANNELINE

Questions?